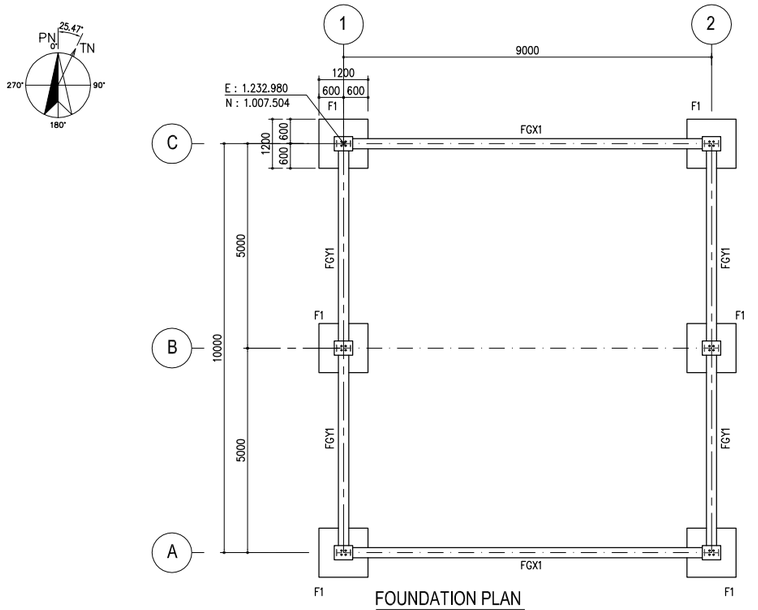

FOUNDATION PLAN
SCALE 1 : 75

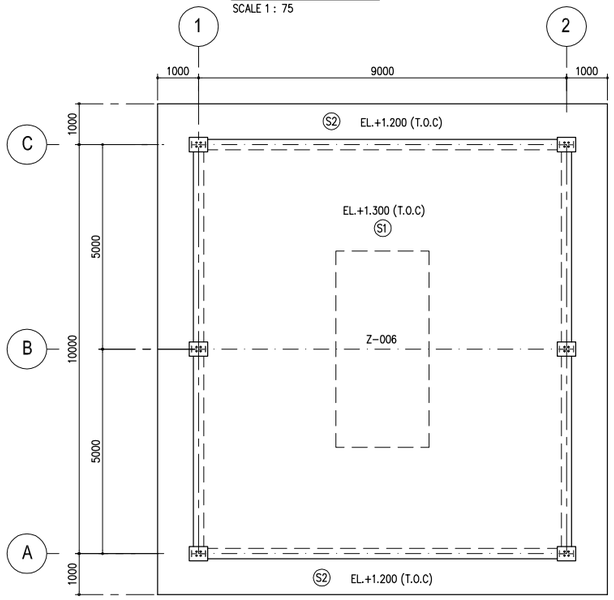

FLOOR PLAN
SCALE 1 : 75

GIRDER BEAM & BEAM SCHEDULE

MARK	FGX1/ FGY1	
DIMENSION	250 x 400	
ELEVATION (T.O.C)	EL. +1.100 (T.O.C)	
LOCATION	BOTH END	MIDDLE
SECTION		
TOP BAR	3 D13	3 D13
BOTTOM BAR	3 D13	3 D13
WEB BAR	–	–
STIRRUPS	D10 @200	D10 @200
CROSS TIE	–	–

SLAB SCHEDULE

MARK	S1	S2
THICKNESS	200 THK	100 THK
ELEVATION	EL +1.300	EL +1.200
SECTION	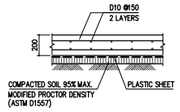	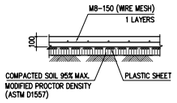

F1 DETAIL (QTY=6 NOS)

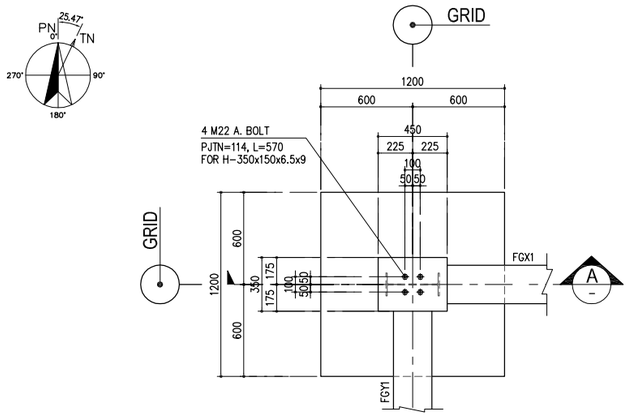

PLAN
SCALE 1 : 20

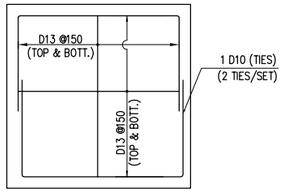

REBAR ARRANGEMENT
SCALE 1 : 20

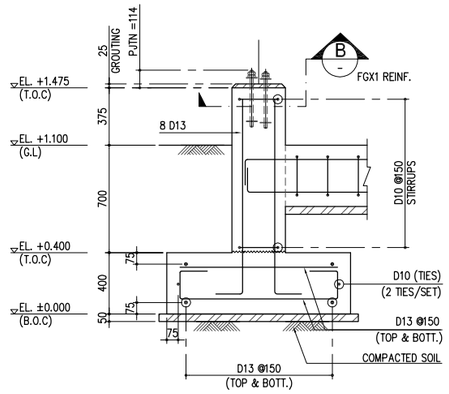

SECTION A
SCALE 1 : 25

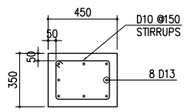

SECTION B
SCALE 1 : 20

KEY PLAN

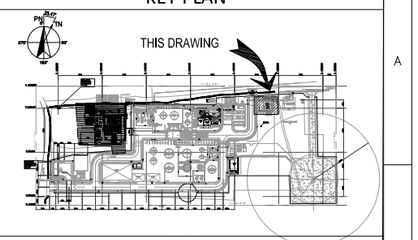

CATATAN

NOTE :

1. ALL DIMENSIONS ARE IN MILIMETERS, ELEVATION AND COORDINATE ARE IN METERS UNLESS OTHERWISE NOTED.
2. REFERENCE OF ELEVATION AND COORDINATE
   GL ± 0.000 = MSL +33.75 = +1.100
   PE =1.000.000 : E = 424962.745
   PN =1.000.000 : N = 9607576.210
3. MATERIAL SPECIFICATION
   - LEVELING COCRETE fc' = 15 MPa (CEMENT TYPE-I)
   - CONCRETE STRUCTURE fc' = 25 MPa (CEMENT TYPE-I)
   - DEFORMED BAR SNI 07-2052-2002, BJTP 40
     MINIMUM YIELD STRENGTH 4000 kg/cm2
   - PLAIN BAR SNI 07-2052-2002, BJTP 24
     MINIMUM YIELD STRENGTH 2400 kg/cm2
   - WIREMESH SHALL CONFORM TO ASTM A185 MIN. fy = 5000 kg/cm2
   - GROUTING : NON SHRINK GROUT, COMP.
     STRENGTH = 35 NPa CONFORM TO ASTM C1107
4. THIS DOCUMENT IS FOR FEED ONLY. ANY DETAILS AND CHANGE DUE TO CONSTRUCTION PURPOSE SHALL BE DEVELOPED IN DETAIL ENGINEERING STAGE DIMENSION AND LOCATION SHALL BE VERIFIED TO LATEST PLOT PLAN AND VENDOR DATA

NOTES :

1. BEFORE STARTING CONSTRUCTION, CONTRACTOR SHALL VERIFY ACTUAL FIELD CONDITION AND DETERMINE LOCATION, ELEVATION OF EXISTING GRADING AND OTHER STRUCTURE. THE CONTRACTOR SHALL TAKE NECESSARY MEASURES TO HOLD SAFE AND PREVENT DAMAGE TO ANY EXISTING FACILITIES.

DRAWING REFERENCE	DESCRIPTION	REV	DATE	DESCRIPTION	PREPR'D	CHECK'D	APRV'D
TMBP-SP001-CS-ARC-106	ARCHITECTURE FLOOR PLAN, ROOF PLAN AND ELEVATION OF INSTRUMENT AIR PACKAGE						
TMBP-SP001-CS-FRM-106	FRAMING PLAN, ROOF PLAN, ELEVATION, SECTION & DETAIL OF INSTRUMENT AIR PACKAGE						
TMBP-SP001-CS-LAY-D102	OVERALL FOUNDATION LAYOUT						
TMBP-SP001-PI-PLP-101	OVERALL PLOT PLAN DRAWING	A	31/12/2025	ISSUED FOR REVIEW	NAS	AS	RTN

PT. PERTAMINA EP APPROVAL

CHECKED	APPROVED

PROCET :
JASA PEMBANGUNAN FASILITAS PRODUKSI STASIUN PENGUMPUL (SP) TANJUNG MIRING BARAT & KARANGAN TIMUR

OWNER : skkmigas, PERTAMINA EP

CONTRACTOR : POG

SCALE : NTS

DRAWING NO. TMBP-SP001-CS-BLD-106

SHEET. NO.

REV A

DRAWING TITLE :

FOUNDATION PLAN, DETAIL AND SECTION OF INSTRUMENT AIR PACKAGE